3953 Chicken House

Assembly Instruction

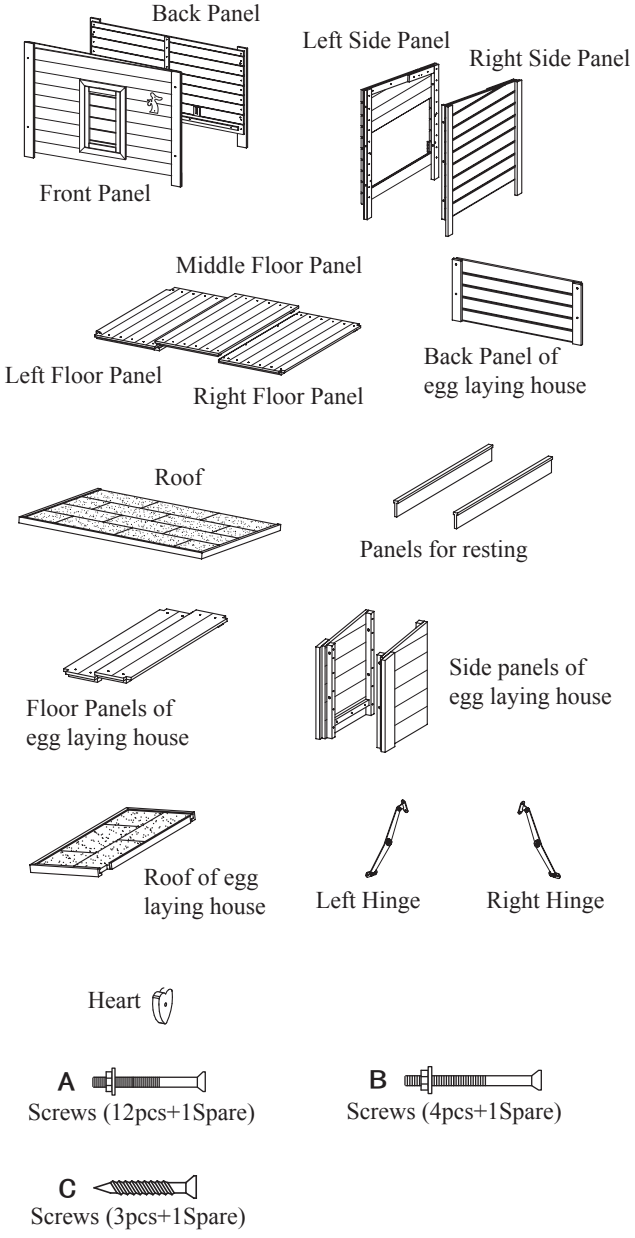

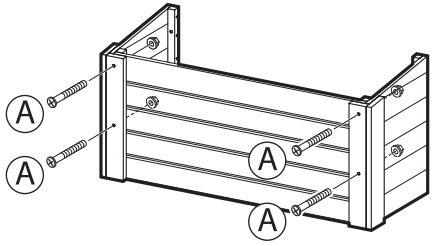

1 Secure the Side Panels of egg laying house onto the Back Panel of egg laying house with A.

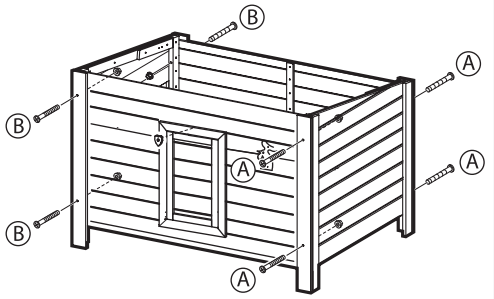

2 Secure the Right Side Panel with A, the Left Side Panel with B. And secure the Heart.

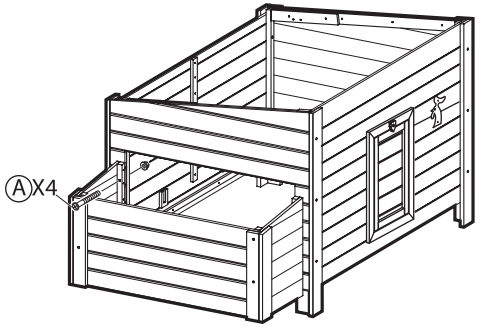

3 Secure the egg laying house onto the chicken house with A.

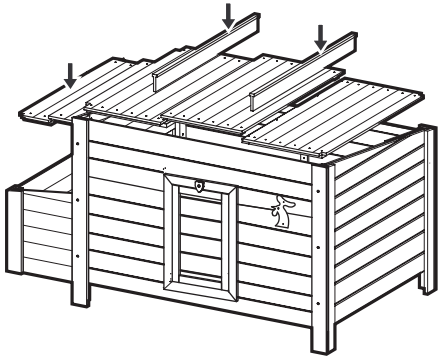

4 Drop in the Floor Panels, and insert the Panels for resting.

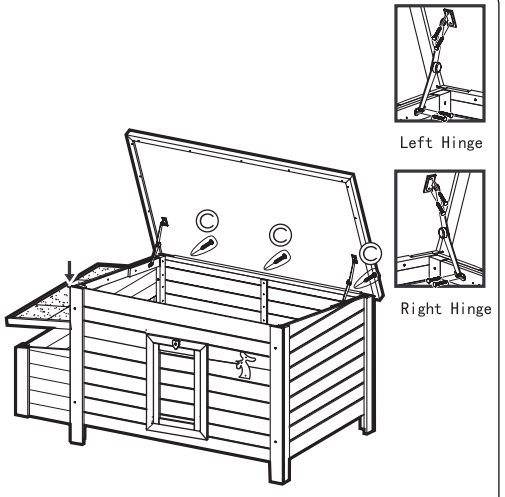

5 Put the Roof of egg laying house onto the body. Secure the Roof onto the body with C.

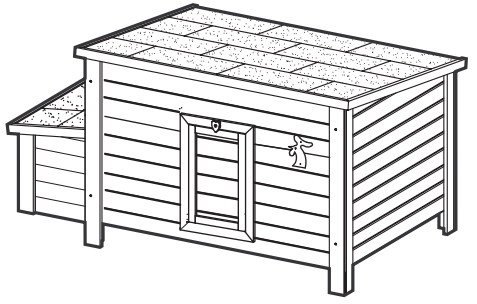

6 Finish.