2893 Rabbit Hutch Assembly Instruction

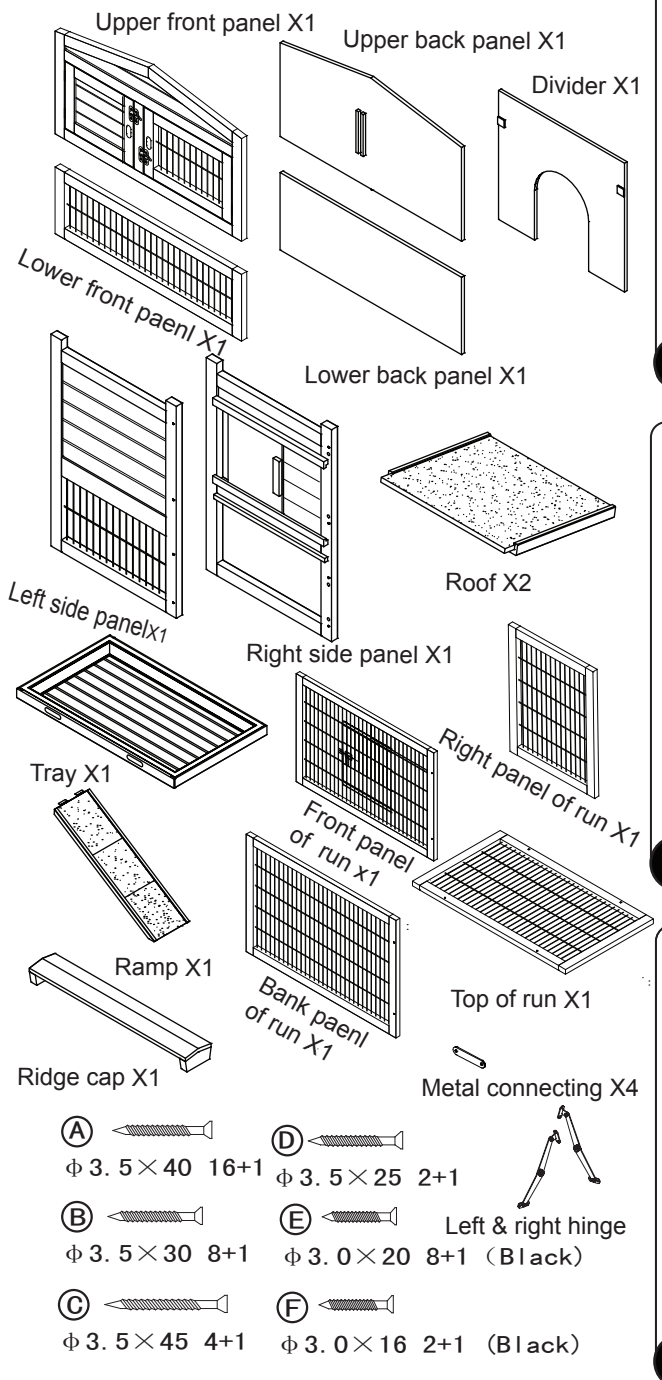

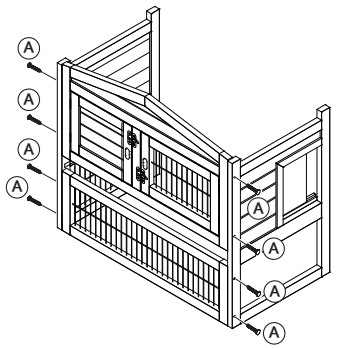

1 Assemble the upper & lower front panels and back panels with screws A.

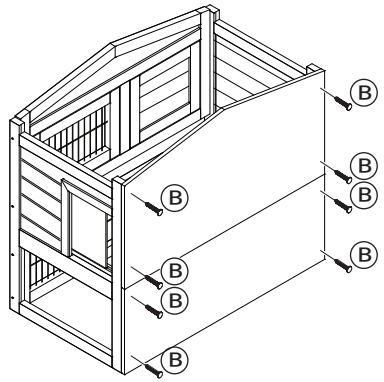

2 Assemble the back panels and two side panels with screws B.

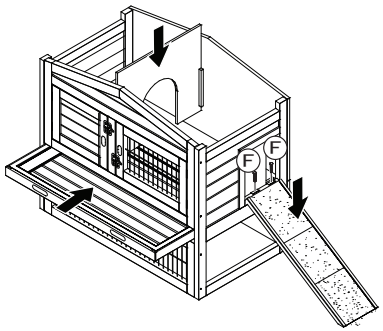

3 Fix the ramp with screws F, then put in the divider and tray as per pictures shows.

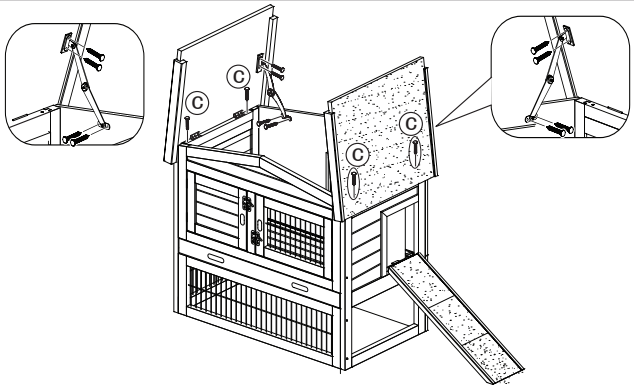

4 Fix the roof connection with screws C, Then fix the metal hing.

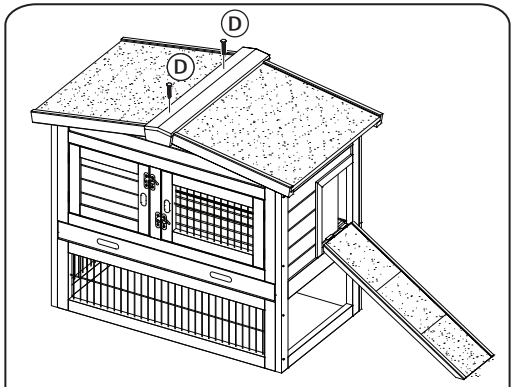

5 Fix the ridge cap with screws D。

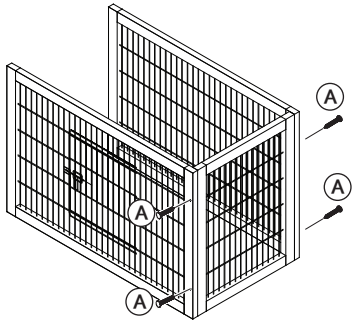

6 Assemble the right panel and front & banck panel with screws A.

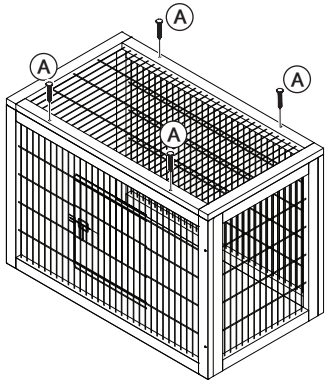

7 Fix the top of run with screws A.

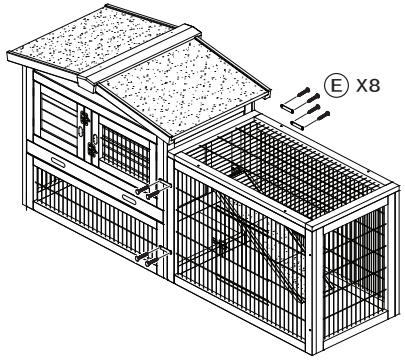

8 Combine run and hutch by metal connecting with screws E, Finish.